LIGHT RAIL TRANSIT AUTHORITY

BAGONG PILIPINAS

Invitation to Bid for the

Contract for the Supply of Eight (8) pcs. Pantograph Assembly or its equivalent

Under

PR No. RS2-2504-141 and ITB No. 2505-098-01

Schedule of Activities

Pre-bid Conference : **09 July 2025 (Wednesday)** at 10:00 A.M.
Cafeteria, LRTA Line 2- Depot, Santolan, Pasig City

Deadline of Submission of Bids : **23 July 2025 (Wednesday)** at 9:30 A.M.
Cafeteria, LRTA Line 2- Depot, Santolan, Pasig City

Opening of Bids : **23 July 2025 (Wednesday)** at 10:00 A.M.
Cafeteria, LRTA Line 2- Depot, Santolan, Pasig City

Complete details of the Technical Specifications are in the Bidding Documents, and can be viewed on PhilGEPS and LRTA websites.

The Light Rail Transit Authority (LRTA), through the Corporate Operating Budget (COB) FY 2025, intends to apply the sum of **Fourteen Million Eighty Thousand (₱14,080,000.00) Pesos only,** inclusive of all duties, taxes, and/or other charges, being the Approved Budget for the Contract (ABC) to payments under the afore-mentioned contract. Bids received in excess of the ABC shall be automatically rejected at bid opening.

LRTA now invites bids from Prospective/Interested Bidders with the following details:

Description	Approved Budget for the Contract (ABC) (₱)	Bid Security		Cost of Bid Documents
		Cash/CC-MCBank draft/ guarantee or ILC (2%)	Surety bond (5%)	
Contract for the Supply of Eight (8) pcs. Pantograph Assembly or its equivalent	**₱14,080,000.00**	**₱281,600.00**	**₱704,000.00**	**₱25,000.00**

Address:
Line 2 Depot, Marcos Highway, Santolan, Pasig City, Metro Manila, Philippines 1610
Trunkline: 86473479 / 86473481 / 86473484 / 86473485 / 86473487
website: www.lrta.gov.ph

CERTIFICATION INTERNATIONAL ISO 9001:2015

Note: **Prospective bidders have the option to post a Bid Securing Declaration which commits to pay the corresponding amount as fine and be suspended for a period of time from being qualified to participate in any government procurement activity in the event it violates any of the conditions stated therein as required in the guidelines issued by the GPPB.**

The contract period is within **Eleven (11) Months from receipt of Purchase Order (PO).** Bidders should have completed, within fifteen (15) years from the date of submission and receipt of bids, a contract similar to the Project. The description of an eligible bidder is contained in the Bidding Documents, particularly, in Section II (Instructions to Bidders).

Bidding will be conducted through open competitive bidding procedure using a non-discretionary" pass/*fail"* criterion as specified in the 2016 Implementing Rules and Regulations (R-IRR) of Republic Act No. 9184.

Bidding is restricted to Filipino citizens / sole proprietorships, partnerships, corporations, cooperatives or joint ventures with at least sixty (60%) percent interest or outstanding capital stock belonging to citizens of the Philippines and to citizens or organizations of a country the laws or regulations of which grant similar rights or privileges to Filipino citizens, pursuant to RA No. 5183.

Prospective Bidders may obtain further information from LRTA and inspect the Bidding Documents at the BAC Secretariat Office, LRTA Line 2 Depot, Marcos Highway, Santolan, Pasig City during office hours from 8:00 A.M. to 5:00 P.M.

A complete set of Bidding Documents may be acquired by interested Bidders on **02 July 2025 (Wednesday)** until not later than the deadline for the submission and receipt of bids from the address below and upon payment of the applicable fee for the Bidding Documents, pursuant to the latest Guidelines issued by the GPPB, in the amount indicated above. The LRTA shall allow the bidder to present its proof of payment for the fees through personal appearance, facsimile, or through e-mail.

The LRTA will hold a Pre-Bid Conference on the date and address as described above, which shall be open to prospective bidders.

Bids must be duly received by the BAC Secretariat through manual submission at the address indicated above on or before **23 July 2025 (Wednesday) @ 9:30 A.M**. Late bids shall not be accepted.

All Bids must be accompanied by a bid security in any of the acceptable forms and in the amount stated in the Instruction to Bidders and the Bid Data Sheet.

Bid opening shall be on **23 July 2025 (Wednesday) @ 10:00 A.M.** at the address indicated above. Bids will be opened in the presence of the bidders' representatives who choose to attend the activity.

The LRTA reserves the right to reject any and all bids, declare a failure of bidding, or not award the contract at any time prior to contract award in accordance with Sections 35.6 and 41 of the 2016 revised IRR of RA No. 9184, without thereby incurring any liability to the affected bidder or bidders.

For further information, please refer to:

Atty.AYLWINSTON C. PILLOS
Head, BAC Secretariat
BAC Secretariat Office
LRTA Line 2 Depot, Marcos Highway, Santolan, Pasig City

Tel. Nos. 647-3484 to 86 loc. 29872
Mobile No. 09555678381
Email Address: bacsec@lrta.gov.ph
Facsimile No. 647-3484 to 86 loc. 29906/29

You may visit the following websites:

https://www.lrta.gov.ph/
https://philgeps.gov.ph/

NICOLAS G. OMBAO
Chairperson, Bids and Awards Committee

Simultaneously posted @ PhilGEPS and LRTA websites, as well as in the LRTA Bulletin Board on 02 July 2025.

REPUBLIC OF THE PHILIPPINES
Department Of Transportation
LIGHT RAIL TRANSIT AUTHORITY

BIDDING DOCUMENTS

(Procurement of GOODS)

Contract for the Supply of Eight (8) pcs. Pantograph Assembly or its equivalent

Under

PR No. RS2-2504-141 and ITB No. 2505-098-01

Posting Date : 02 JULY 2025

Sixth Edition
July 2020

Table of Contents

Glossary of Acronyms, Terms, and Abbreviations …….3
Section I. Invitation to Bid……..6
Section II. Instructions to Bidders……...7
1. Scope of Bid ……10
2. Funding Information……10
3. Bidding Requirements …… 10
4. Corrupt, Fraudulent, Collusive, and Coercive Practices 10
5. Eligible Bidders…… 10
6. Origin of Goods …….. 11
7. Subcontracts …… 11
8. Pre-Bid Conference …… 12
9. Clarification and Amendment of Bidding Documents …… 12
10. Documents comprising the Bid: Eligibility and Technical Components ……12
11. Documents comprising the Bid: Financial Component ……...13
12. Bid Prices ……13
13. Bid and Payment Currencies ……14
14. Bid Security …… 14
15. Sealing and Marking of Bids ……15
16. Deadline for Submission of Bids ……15
17. Opening and Preliminary Examination of Bids …….. 15
18. Domestic Preference ……16
19. Detailed Evaluation and Comparison of Bids …… 16
20. Post-Qualification …… 17
21. Signing of the Contract …… 17
Section III. Bid Data Sheet ……..19
Section IV. General Conditions of Contract ……...……..22
1. Scope of Contract …… 23
2. Advance Payment and Terms of Payment …….. 23
3. Performance Security …… 23
4. Inspection and Tests …… 24
5. Warranty …… 24
6. Liability of the Supplier …….. 24
Section V. Special Conditions of Contract ……25
Section VI. Schedule of Requirements ……....30
Section VII. Technical Specifications ……..……31
Section VIII. Checklist of Technical and Financial Documents ……..…43

Glossary of Acronyms, Terms, and Abbreviations

ABC –Approved Budget for the Contract.

BAC – Bids and Awards Committee.

Bid – A signed offer or proposal to undertake a contract submitted by a bidder in response to and in consonance with the requirements of the bidding documents. Also referred to as *Proposal* and *Tender.*(2016 revised IRR, Section 5[c])

Bidder – Refers to a contractor, manufacturer, supplier, distributor and/or consultant who submits a bid in response to the requirements of the Bidding Documents. (2016 revised IRR, Section 5[d])

Bidding Documents – The documents issued by the Procuring Entity as the bases for bids, furnishing all information necessary for a prospective bidder to prepare a bid for the Goods, Infrastructure Projects, and/or Consulting Services required by the Procuring Entity. (2016 revised IRR, Section 5[e])

BIR – Bureau of Internal Revenue.

BSP – BangkoSentralngPilipinas.

Consulting Services – Refer to services for Infrastructure Projects and other types of projects or activities of the GOP requiring adequate external technical and professional expertise that are beyond the capability and/or capacity of the GOP to undertake such as, but not limited to: (i) advisory and review services; (ii) pre-investment or feasibility studies; (iii) design; (iv) construction supervision; (v) management and related services; and (vi) other technical services or special studies. (2016 revised IRR, Section 5[i])

CDA - Cooperative Development Authority.

Contract – Refers to the agreement entered into between the Procuring Entity and the Supplier or Manufacturer or Distributor or Service Provider for procurement of Goods and Services; Contractor for Procurement of Infrastructure Projects; or Consultant or Consulting Firm for Procurement of Consulting Services; as the case may be, as recorded in the Contract Form signed by the parties, including all attachments and appendices thereto and all documents incorporated by reference therein.

CIF – Cost Insurance and Freight.

CIP – Carriage and Insurance Paid.

CPI – Consumer Price Index.

DDP – Refers to the quoted price of the Goods, which means "delivered duty paid."

DTI – Department of Trade and Industry.

EXW – Ex works.

FCA – "Free Carrier" shipping point.

FOB – "Free on Board" shipping point.

Foreign-funded Procurement or Foreign-Assisted Project–Refers to procurement whose funding source is from a foreign government, foreign or international financing institution as specified in the Treaty or International or Executive Agreement. (2016 revised IRR, Section 5[b]).

Framework Agreement – Refers to a written agreement between a procuring entity and a supplier or service provider that identifies the terms and conditions, under which specific purchases, otherwise known as "Call-Offs," are made for the duration of the agreement. It is in the nature of an option contract between the procuring entity and the bidder(s) granting the procuring entity the option to either place an order for any of the goods or services identified in the Framework Agreement List or not buy at all, within a minimum period of one (1) year to a maximum period of three (3) years. (GPPB Resolution No. 27-2019)

GFI – Government Financial Institution.

GOCC –Government-owned and/or –controlled corporation.

Goods – Refer to all items, supplies, materials and general support services, except Consulting Services and Infrastructure Projects, which may be needed in the transaction of public businesses or in the pursuit of any government undertaking, project or activity, whether in the nature of equipment, furniture, stationery, materials for construction, or personal property of any kind, including non-personal or contractual services such as the repair and maintenance of equipment and furniture, as well as trucking, hauling, janitorial, security, and related or analogous services, as well as procurement of materials and supplies provided by the Procuring Entity for such services. The term "related" or "analogous services" shall include, but is not limited to, lease or purchase of office space, media advertisements, health maintenance services, and other services essential to the operation of the Procuring Entity. (2016 revised IRR, Section 5[r])

GOP – Government of the Philippines.

GPPB –Government Procurement Policy Board.

INCOTERMS – International Commercial Terms.

Infrastructure Projects – Include the construction, improvement, rehabilitation, demolition, repair, restoration or maintenance of roads and bridges, railways, airports, seaports, communication facilities, civil works components of information technology projects, irrigation, flood control and drainage, water supply, sanitation, sewerage and solid waste management systems, shore protection, energy/power and electrification facilities, national

buildings, school buildings, hospital buildings, and other related construction projects of the government. Also referred to as *civil works or works*. (2016 revised IRR, Section 5[u])

LGUs – Local Government Units.

NFCC – Net Financial Contracting Capacity.

NGA – National Government Agency.

PhilGEPS - Philippine Government Electronic Procurement System.

Procurement Project – refers to a specific or identified procurement covering goods, infrastructure project or consulting services. A Procurement Project shall be described, detailed, and scheduled in the Project Procurement Management Plan prepared by the agency which shall be consolidated in the procuring entity's Annual Procurement Plan. (GPPB Circular No. 06-2019 dated 17 July 2019)

PSA – Philippine Statistics Authority.

SEC – Securities and Exchange Commission.

SLCC – Single Largest Completed Contract.

Supplier – refers to a citizen, or any corporate body or commercial company duly organized and registered under the laws where it is established, habitually established in business and engaged in the manufacture or sale of the merchandise or performance of the general services covered by his bid. (Item 3.8 of GPPB Resolution No. 13-2019, dated 23 May 2019). Supplier as used in these Bidding Documents may likewise refer to a distributor, manufacturer, contractor, or consultant.

UN – United Nations.

Section I
Invitation to Bid

LIGHT RAIL TRANSIT AUTHORITY

BAGONG PILIPINAS

Invitation to Bid for the

Contract for the Supply of Eight (8) pcs. Pantograph Assembly or its equivalent

Under

PR No. RS2-2504-141 and ITB No. 2505-098-01

Schedule of Activities

Pre-bid Conference : **09 July 2025 (Wednesday)** at 10:00 A.M.
Cafeteria, LRTA Line 2- Depot, Santolan, Pasig City

Deadline of Submission of Bids : **23 July 2025 (Wednesday)** at 9:30 A.M.
Cafeteria, LRTA Line 2- Depot, Santolan, Pasig City

Opening of Bids : **23 July 2025 (Wednesday)** at 10:00 A.M.
Cafeteria, LRTA Line 2- Depot, Santolan, Pasig City

Complete details of the Technical Specifications are in the Bidding Documents, and can be viewed on PhilGEPS and LRTA websites.

The Light Rail Transit Authority (LRTA), through the Corporate Operating Budget (COB) FY 2025, intends to apply the sum of **Fourteen Million Eighty Thousand (₱14,080,000.00) Pesos only,** inclusive of all duties, taxes, and/or other charges, being the Approved Budget for the Contract (ABC) to payments under the afore-mentioned contract. Bids received in excess of the ABC shall be automatically rejected at bid opening.

LRTA now invites bids from Prospective/Interested Bidders with the following details:

Description	Approved Budget for the Contract (ABC) (**₱**)	Bid Security		Cost of Bid Documents
		Cash/CC-MCBank draft/ guarantee or ILC (2%)	Surety bond (5%)	
Contract for the Supply of Eight (8) pcs. Pantograph Assembly or its equivalent	**₱14,080,000.00**	**₱281,600.00**	**₱704,000.00**	**₱25,000.00**

Note: **Prospective bidders have the option to post a Bid Securing Declaration which commits to pay the corresponding amount as fine and be suspended for a period of time from being qualified to participate in any government procurement activity in the event it violates any of the conditions stated therein as required in the guidelines issued by the GPPB.**

The contract period is within **Eleven (11) Months from receipt of Purchase Order (PO).** Bidders should have completed, within fifteen (15) years from the date of submission and receipt of bids, a contract similar to the Project. The description of an eligible bidder is contained in the Bidding Documents, particularly, in Section II (Instructions to Bidders).

Bidding will be conducted through open competitive bidding procedure using a non-discretionary" pass/*fail"* criterion as specified in the 2016 Implementing Rules and Regulations (R-IRR) of Republic Act No. 9184.

Bidding is restricted to Filipino citizens / sole proprietorships, partnerships, corporations, cooperatives or joint ventures with at least sixty (60%) percent interest or outstanding capital stock belonging to citizens of the Philippines and to citizens or organizations of a country the laws or regulations of which grant similar rights or privileges to Filipino citizens, pursuant to RA No. 5183.

Prospective Bidders may obtain further information from LRTA and inspect the Bidding Documents at the BAC Secretariat Office, LRTA Line 2 Depot, Marcos Highway, Santolan, Pasig City during office hours from 8:00 A.M. to 5:00 P.M.

A complete set of Bidding Documents may be acquired by interested Bidders on **02 July 2025 (Wednesday)** until not later than the deadline for the submission and receipt of bids from the address below and upon payment of the applicable fee for the Bidding Documents, pursuant to the latest Guidelines issued by the GPPB, in the amount indicated above. The LRTA shall allow the bidder to present its proof of payment for the fees through personal appearance, facsimile, or through e-mail.

The LRTA will hold a Pre-Bid Conference on the date and address as described above, which shall be open to prospective bidders.

Bids must be duly received by the BAC Secretariat through manual submission at the address indicated above on or before **23 July 2025 (Wednesday) @ 9:30 A.M**. Late bids shall not be accepted.

All Bids must be accompanied by a bid security in any of the acceptable forms and in the amount stated in the Instruction to Bidders and the Bid Data Sheet.

Bid opening shall be on **23 July 2025 (Wednesday) @ 10:00 A.M.** at the address indicated above. Bids will be opened in the presence of the bidders' representatives who choose to attend the activity.

The LRTA reserves the right to reject any and all bids, declare a failure of bidding, or not award the contract at any time prior to contract award in accordance with Sections 35.6 and 41 of the 2016 revised IRR of RA No. 9184, without thereby incurring any liability to the affected bidder or bidders.

For further information, please refer to:

Atty.AYLWINSTON C. PILLOS
Head, BAC Secretariat
BAC Secretariat Office
LRTA Line 2 Depot, Marcos Highway, Santolan, Pasig City
Tel. Nos. 647-3484 to 86 loc. 29872
Mobile No. 09555678381
Email Address: bacsec@lrta.gov.ph
Facsimile No. 647-3484 to 86 loc. 29906/29

You may visit the following websites:

https://www.lrta.gov.ph/
https://philgeps.gov.ph/

NICOLAS G. OMBAO
Chairperson, Bids and Awards Committee

Simultaneously posted @ PhilGEPS and LRTA websites, as well as in the LRTA Bulletin Board on 02 July 2025.

Section II
Instructions to Bidders

1. Scope of Bid

The Light Rail Transit Authority (LRTA) wishes to receive Bids for Contract for the Supply of Eight (8) pcs. Pantograph Assembly or its equivalent under PR No. RS2-2504-141 and ITB No. 2505-098-01.

The Contract is composed of one item, the details of which are described in Section VII (Technical Specifications).

2. Funding Information

2.1. The Corporate Operating Budget (COB) through the source of funding as indicated below for FY 2025 in the amount of **Fourteen Million Eighty Thousand (₱14,080,000.00) Pesos Only.**

2.2. The source of funding is:

Corporate Operating Budget (COB)

3. Bidding Requirements

The Bidding for the Project shall be governed by all the provisions of RA No. 9184 and its 2016 revised IRR, including its Generic Procurement Manuals and associated policies, rules and regulations as the primary source thereof, while the herein clauses shall serve as the secondary source thereof.

Any amendments made to the IRR and other GPPB issuances shall be applicable only to the ongoing posting, advertisement, or **IB** by the BAC through the issuance of a supplemental or bid bulletin.

The Bidder, by the act of submitting its Bid, shall be deemed to have verified and accepted the general requirements of this Project, including other factors that may affect the cost, duration and execution or implementation of the contract, project, or work and examine all instructions, forms, terms, and project requirements in the Bidding Documents.

4. Corrupt, Fraudulent, Collusive, and Coercive Practices

The Procuring Entity, as well as the Bidders and Suppliers, shall observe the highest standard of ethics during the procurement and execution of the contract. They or through an agent shall not engage in corrupt, fraudulent, collusive, coercive, and obstructive practices defined under Annex "I" of the 2016 revised IRR of RA No. 9184 or other integrity violations in competing for the Project.

5. Eligible Bidders

5.1. Only Bids of Bidders found to be legally, technically, and financially capable will be evaluated.

5.2. a. Foreign ownership exceeding those allowed under the rules may participate pursuant to:

i. When a Treaty or International or Executive Agreement as provided in Section 4 of the RA No. 9184 and its 2016 revised IRR allow foreign bidders to participate;

ii. Citizens, corporations, or associations of a country, included in the list issued by the GPPB, the laws or regulations of which grant reciprocal rights or privileges to citizens, corporations, or associations of the Philippines;

iii. When the Goods sought to be procured are not available from local suppliers; or

iv. When there is a need to prevent situations that defeat competition or restrain trade.

b. Foreign ownership limited to those allowed under the rules may participate in this Project.

5.3. Pursuant to Section 23.4.1.3 of the 2016 revised IRR of RA No.9184, the Bidder shall have an SLCC that is at least one (1) contract similar to the Project the value of which, adjusted to current prices using the PSA's CPI, must be at least equivalent to:

The Bidder must have completed a single contract that is similar to this Project, equivalent to at least fifty percent (50%) of the ABC.

5.4. The Bidders shall comply with the eligibility criteria under Section 23.4.1 of the 2016 IRR of RA No. 9184.

6. Origin of Goods

There is no restriction on the origin of goods other than those prohibited by a decision of the UN Security Council taken under Chapter VII of the Charter of the UN, subject to Domestic Preference requirements under **ITB** Clause 18.

7. Subcontracts

7.1. The Bidder may subcontract portions of the Project to the extent allowed by the Procuring Entity as stated herein, but in no case more than twenty percent (20%) of the Project.

The Procuring Entity has prescribed that:

a. ~~Subcontracting is allowed. The portions of Project and the maximum percentage allowed to be subcontracted are indicated in the **BDS**, which shall not exceed twenty percent (20%) of the contracted Goods.~~

b. ***Subcontracting is not allowed.***

~~7.2. The Bidder must submit together with its Bid the documentary requirements of the subcontractor(s) complying with the eligibility criteria stated in **ITB** Clause 5 in accordance with Section 23.4 of the 2016 revised IRR of RA No. 9184 pursuant to Section 23.1 thereof.~~

~~7.3. The Supplier may identify its subcontractor during the contract implementation stage. Subcontractors identified during the bidding may be changed during the implementation of this Contract. Subcontractors must submit the documentary requirements under Section 23.1 of the 2016 revised IRR of RA No. 9184 and comply with the eligibility criteria specified in **ITB** Clause 5 to the implementing or end-user unit.~~

~~7.4. Subcontracting of any portion of the Project does not relieve the Supplier of any liability or obligation under the Contract. The Supplier will be responsible for the acts, defaults, and negligence of any subcontractor, its agents, servants, or workmen as fully as if these were the Supplier's own acts, defaults, or negligence, or those of its agents, servants, or workmen.~~

8. Pre-Bid Conference

The Procuring Entity will hold a pre-bid conference for this Project on the specified date and time and either at its physical address and/or through as indicated in the **IB and Clause 8 of the BDS.**

9. Clarification and Amendment of Bidding Documents

Prospective bidders may request for clarification on and/or interpretation of any part of the Bidding Documents. Such requests must be in writing and received by the Procuring Entity, either at its given address or through electronic mail indicated in the **IB**, at least ten (10) calendar days before the deadline set for the submission and receipt of Bids.

10. Documents comprising the Bid: Eligibility and Technical Components

10.1. The first envelope shall contain the eligibility and technical documents of the Bid as specified in **Section VIII (Checklist of Technical and Financial Documents)**.

10.2. The Bidder's SLCC as indicated in **ITB** Clause5.3 should have been completed within ***15 years*** prior to the deadline for the submission and receipt of bids.

10.3. If the eligibility requirements or statements, the bids, and all other documents for submission to the BAC are in foreign language other than English, it must

be accompanied by a translation in English, which shall be authenticated by the appropriate Philippine foreign service establishment, post, or the equivalent office having jurisdiction over the foreign bidder's affairs in the Philippines. Similar to the required authentication above, for Contracting Parties to the Apostille Convention, only the translated documents shall be authenticated through an apostille pursuant to GPPB Resolution No. 13-2019 dated 23 May 2019. The English translation shall govern, for purposes of interpretation of the bid.

11. Documents comprising the Bid: Financial Component

11.1. The second bid envelope shall contain the financial documents for the Bid as specified in **Section VIII (Checklist of Technical and Financial Documents)**.

11.2. If the Bidder claims preference as a Domestic Bidder or Domestic Entity, a certification issued by DTI shall be provided by the Bidder in accordance with Section 43.1.3 of the 2016 revised IRR of RA No. 9184.

11.3. Any bid exceeding the ABC indicated in paragraph 1 of the **IB** shall not be accepted.

11.4. For Foreign-funded Procurement, a ceiling may be applied to bid prices provided the conditions are met under Section 31.2 of the 2016 revised IRR of RA No. 9184.

11.5. Financial proposals for single or multi-year Framework Agreement shall be submitted before the deadline of submission of bids as prescribed in the **IB**. For multi-year Framework Agreement, evaluation of the financial proposal during this stage is for purposes of determining eligibility and whether or not such financial proposal is within the ABC.

12. Bid Prices

12.1. Prices indicated on the Price Schedule shall be entered separately in the following manner:

a. For Goods offered from within the Procuring Entity's country:

i. The price of the Goods quoted EXW (ex-works, ex-factory, ex-warehouse, ex-showroom, or off-the-shelf, as applicable);

ii. The cost of all customs duties and sales and other taxes already paid or payable;

iii. The cost of transportation, insurance, and other costs incidental to delivery of the Goods to their final destination; and

iv. The price of other (incidental) services, if any, listed in the **BDS.**

b. For Goods offered from abroad:

i. Unless otherwise stated in the **BDS**, the price of the Goods shall be quoted delivered duty paid (DDP) with the place of destination in the Philippines as specified in the **BDS**. In quoting the price, the Bidder shall be free to use transportation through carriers registered in any eligible country. Similarly, the Bidder may obtain insurance services from any eligible source country.

ii. The price of other (incidental) services, if any, as listed in **Section VII (Technical Specifications).**

12.2. ~~For Framework Agreement, the following should also apply in addition to Clause 12.1:~~

~~a. For a single year Framework Agreement, the prices quoted by the Bidder shall be fixed during the Bidder's performance of the contract and not subject to variation or escalation on any account. Price schedules required under Clause 12.1 shall be submitted with the bidding documents.~~

~~b. For a multi-year Framework Agreement, the prices quoted by the Bidder during submission of eligibility documents shall be the ceiling and the price quoted during mini-competition must not exceed the initial price offer. The price quoted during call for mini-competition shall be fixed during the Bidder's performance of that Call-off and not subject to variation or escalation on any account. Price schedules required under Clause 12.1 shall be submitted with the bidding documents.~~

13. Bid and Payment Currencies

13.1. For Goods that the Bidder will supply from outside the Philippines, the bid prices may be quoted in the local currency or tradable currency accepted by the BSP at the discretion of the Bidder. However, for purposes of bid evaluation, Bids denominated in foreign currencies, shall be converted to Philippine currency based on the exchange rate as published in the BSP reference rate bulletin on the day of the bid opening.

13.2. Payment of the contract price shall be made in:

a. Philippine Pesos.

~~b. *[indicate currency if procurement involves a foreign-denominated bid as allowed by the Procuring Entity, which shall be tradable or acceptable by the BSP].*~~

14. Bid Security

14.1. The Bidder shall submit a Bid Securing Declaration or any form of Bid Security in the amount indicated in the **BDS**, which shall be not less than the percentage of the ABC in accordance with the schedule in the **BDS**.

14.2. The Bid and bid security shall be valid until ***120 calendar days from the date of opening of bids.*** Any Bid not accompanied by an acceptable bid security shall be rejected by the Procuring Entity as non-responsive.

14.3. In the case of Framework Agreement, other than the grounds for forfeiture under the 2016 revised IRR, the bid security may also be forfeited if the successful bidder fails to sign the Framework Agreement, or fails to furnish the performance security or performance securing declaration. Without prejudice on its forfeiture, bid securities shall be returned only after the posting of performance security or performance securing declaration, as the case may be, by the winning Bidder or compliant Bidders and the signing of the Framework Agreement.

15. Sealing and Marking of Bids

Each Bidder shall submit one copy of the first and second components of its Bid.

The Procuring Entity may request additional hard copies and/or electronic copies of the Bid. However, failure of the Bidders to comply with the said request shall not be a ground for disqualification.

If the Procuring Entity allows the submission of bids through online submission or any other electronic means, the Bidder shall submit an electronic copy of its Bid, which must be digitally signed. An electronic copy that cannot be opened or is corrupted shall be considered non-responsive and, thus, automatically disqualified.

16. Deadline for Submission of Bids

16.1. The Bidders shall submit on the specified date and time and either at its physical address or through online submission as indicated in the **IB and Clause 16.1 of BDS.**

16.2. For multi-year Framework Agreement, the submission of bids shall be for the initial evaluation of their technical and financial eligibility. Thereafter, those declared eligible during the said initial eligibility evaluation and entered into a Framework Agreement with the Procuring Entity shall submit anew their best financial offer at the address and on or before the date and time indicated in the Call for each mini-competition.

17. Opening and Preliminary Examination of Bids

17.1. The BAC shall open the Bids in public at the time, on the date, and at the place specified in the **IB**. The Bidders' representatives who are present shall sign a register evidencing their attendance. In case videoconferencing, webcasting or other similar technologies will be used, attendance of participants shall likewise be recorded by the BAC Secretariat.

In case the Bids cannot be opened as scheduled due to justifiable reasons, the rescheduling requirements under Section 29 of the 2016 revised IRR of RA No. 9184 shall prevail.

17.2. The preliminary examination of bids shall be governed by Section 30 of the 2016 revised IRR of RA No. 9184.

18. Domestic Preference

18.1. The Procuring Entity will grant a margin of preference for the purpose of comparison of Bids in accordance with Section 43.1.2 of the 2016 revised IRR of RA No. 9184.

18.2. For multi-year Framework Agreement, determination of margin of preference shall be conducted every call for Mini-Competition.

19. Detailed Evaluation and Comparison of Bids

19.1. The Procuring BAC shall immediately conduct a detailed evaluation of all Bids rated "*passed*," using non-discretionary pass/fail criteria. The BAC shall consider the conditions in the evaluation of Bids under Section 32.2 of the 2016 revised IRR of RA No. 9184.

a. In the case of single-year Framework Agreement, the Lowest Calculated Bid shall be determined outright after the detailed evaluation;

b. For multi-year Framework Agreement, the determination of the eligibility and the compliance of bidders with the technical and financial aspects of the projects shall be initially made by the BAC, in accordance with Item 7.4.2 of the Guidelines on the Use of Framework Agreement.

19.2. If the Project allows partial bids, bidders may submit a proposal on any of the lots or items, and evaluation will be undertaken on a per lot or item basis, as the case maybe. In this case, the Bid Security as required by **ITB** Clause 15 shall be submitted for each lot or item separately.

19.3. The descriptions of the lots or items shall be indicated in **Section VII (Technical Specifications)**, although the ABCs of these lots or items are indicated in the **BDS** for purposes of the NFCC computation pursuant to Section 23.4.2.6 of the 2016 revised IRR of RA No. 9184. The NFCC must be sufficient for the total of the ABCs for all the lots or items participated in by the prospective Bidder.

19.4. The Project shall be awarded as follows:

Option 1 – One Project having several items that shall be awarded as one contract.

~~Option 2 – One Project having several items grouped into several lots, which shall be awarded as separate contracts per lot.~~

~~Option 3 – One Project having several items, which shall be awarded as separate contracts per item.~~

19.5. Except for bidders submitting a committed Line of Credit from a Universal or Commercial Bank in lieu of its NFCC computation, all Bids must include the NFCC computation pursuant to Section 23.4.1.4 of the 2016 revised IRR of RA No. 9184, which must be sufficient for the total of the ABCs for all the lots or items participated in by the prospective Bidder. For bidders submitting the committed Line of Credit, it must be at least equal to ten percent (10%) of the ABCs for all the lots or items participated in by the prospective Bidder.

20. Post-Qualification

20.1. For multi-year Framework Agreement, all bidders initially determined to be eligible and financially compliant shall be subject to initial post-qualification. The BAC shall then recommend the execution of a Framework Agreement among all eligible, technically and financially compliant bidders and the Procuring Entity and shall be issued by HoPE a Notice to Execute Framework Agreement. The determination of the Lowest Calculated Bid (LCB) shall not be performed by the BAC until a Mini-Competition is conducted among the bidders who executed a Framework Agreement. When a Call for Mini-Competition is made, the BAC shall allow the bidders to submit their best financial proposals on such pre-scheduled date, time and place to determine the bidder with the LCB.

20.2. Within a non-extendible period of five (5) calendar days from receipt by the Bidder of the notice from the BAC that it submitted the Lowest Calculated Bid, or in the case of multi-year Framework Agreement, that it is one of the eligible bidders who have submitted bids that are found to be technically and financially compliant,}the Bidder shall submit its latest income and business tax returns filed and paid through the BIR Electronic Filing and Payment System (eFPS) and other appropriate licenses and permits required by law and stated in the **BDS**. For every mini-competition in Framework Agreement, the LCB shall likewise submit the required documents for final Post Qualification.}

21. Signing of the Contract

21.1. The documents required in Section 37.2 of the 2016 revised IRR of RA No. 9184 shall form part of the Contract. Additional Contract documents are indicated in the **BDS**.

21.2. At the same time as the Procuring Entity notifies the successful Bidder that its bid has been accepted, the Procuring Entity shall send the Framework Agreement Form to the Bidder, which contract has been provided in the Bidding Documents, incorporating therein all agreements between the parties.

21.3. Within ten (10) calendar days from receipt of the Notice to Execute Framework Agreement with the Procuring Entity, the successful Bidder or its duly authorized representative shall formally enter into a Framework Agreement with the procuring entity for an amount of One Peso to be paid to the procuring entity as a consideration for the option granted by the procuring entity to procure the items in the Framework Agreement List when the need arises.

21.4. The Procuring Entity shall enter into a Framework Agreement with the successful Bidder within the same ten (10) calendar day period provided that all the documentary requirements are complied with.

21.5. ~~The following documents shall form part of the Framework Agreement:~~

~~a. Framework Agreement Form;~~
~~b. Bidding Documents;~~
~~c. Call-offs;~~
~~d. Winning bidder's bid, including the Technical and Financial Proposals, and all other documents/statements submitted (*e.g.*, bidder's response to request for clarifications on the bid), including corrections to the bid, if any, resulting from the Procuring Entity's bid evaluation;~~
~~e. Performance Security or Performance Securing Declaration, as the case may be;~~
~~f. Notice to Execute Framework Agreement; and~~
~~g. Other contract documents that may be required by existing laws and/or specified in the **BDS**.~~

Section III
Bid Data Sheet

Bid Data Sheet

<table>
<tr><th>ITB Clause</th><th></th></tr>
<tr><td>5.3</td><td>For this purpose, contracts similar to the Project shall be:

a. Any contract/s involving the Supply and Delivery of spare parts for Power; Catenary; Signaling and Telecoms; Rolling Stocks; and/or Depot or Station Facilities and Equipment.

b. The Bidder must have completed, within the last fifteen (15) years prior to the date of submission of bid, a single contract that is similar to this Project, equivalent to at least fifty percent (50%) of the ABC.</td></tr>
<tr><td>7.1 (b)</td><td><u>Sub-contracting is NOT ALLOWED</u></td></tr>
<tr><td>12</td><td>Refer to Section V & Section VII – Special Conditions of Contract on Incidental Services & Technical Specifications.

The bid/price quote shall be delivered duty paid (DDP) with destination: Light Rail Transit Authority (LRTA), Line 2 Depot, Marcos Highway, Santolan, Pasig City.</td></tr>
<tr><td>14.1</td><td>The bid security shall be in the form of a Bid Securing Declaration or any of the following forms and amounts:
<table>
<tr><th rowspan="2">Description</th><th colspan="2">Bid Security</th></tr>
<tr><th>Cash/CC-MCBank draft/ guarantee or ILC (2%)</th><th>Surety bond (5%)</th></tr>
<tr><td>Contract for the Supply of Eight (8) pcs. Pantograph Assembly or its equivalent</td><td>₱281,600.00</td><td>₱704,000.00</td></tr>
</table>
For Surety Bond, the ORIGINAL RECEIPT (O.R) which corresponds to the payment of premium as well as a copy of a Certification duly signed by the insurance Commission authorizing such surety or insurance company to issue such security must be attached and submitted.</td></tr>
<tr><td>15</td><td>In addition to the one (1) set original, Each Bidder is requested to submit additional one (1) set hard copy and one (1) scanned PDF copy in a CD/USB Flash Drive of each of the first and second components of its Bid.</td></tr>
<tr><td>16.1</td><td>In case the deadline for submission of bids fall on a non-working day duly declared by the president, governor or city/municipal mayor or other government official authorized to make such decision, the deadline shall be the next working day.</td></tr>
</table>

<table>
<tr><td>19.3</td><td>
<table>
<tr><th></th><th>Description</th><th>Approved Budget for the Contract (ABC)</th></tr>
<tr><td></td><td>Contract for the Supply of Eight (8) pcs. Pantograph Assembly or its equivalent</td><td>₱14,080,000.00</td></tr>
<tr><td>Note:</td><td>Note: Bidders must indicate in the Price Schedule (Form No. 6 and/or 6A) the Price of Item/s.

Significantly, only bids that are within the ABC, regardless if the price offered for other items in the lot exceeds their respective ABC per item, may be considered for award if proven to be the lowest calculated and responsive bid among all other bids, in the case where several items are grouped into one lot and awarded as one contract.</td><td></td></tr>
</table>
</td></tr>
<tr><td>19.4</td><td>The Project shall be awarded as One Project having several items that shall be awarded as one contract.</td></tr>
<tr><td>20.2</td><td>For further instruction upon issuance of Notice of Post-Qualification.</td></tr>
<tr><td>21.1</td><td>No further instruction.</td></tr>
<tr><td>21.2</td><td>Not applicable.</td></tr>
</table>

Section IV
General Conditions of Contract

1. Scope of Contract

This Contract shall include all such items, although not specifically mentioned, that can be reasonably inferred as being required for its completion as if such items were expressly mentioned herein. All the provisions of RA No. 9184 and its 2016 revised IRR, including the Generic Procurement Manual, and associated issuances, constitute the primary source for the terms and conditions of the Contract, and thus, applicable in contract implementation. Herein clauses shall serve as the secondary source for the terms and conditions of the Contract.

This is without prejudice to Sections 74.1 and 74.2 of the 2016 revised IRR of RA No. 9184 allowing the GPPB to amend the IRR, which shall be applied to all procurement activities, the advertisement, posting, or invitation of which were issued after the effectivity of the said amendment.

Additional requirements for the completion of this Contract shall be provided in the **Special Conditions of Contract** (**SCC).**

2. Advance Payment and Terms of Payment

2.1. Advance payment of the contract amount is provided under Annex "D" of the revised 2016 IRR of RA No. 9184.

2.2. The Procuring Entity is allowed to determine the terms of payment on the partial or staggered delivery of the Goods procured, provided such partial payment shall correspond to the value of the goods delivered and accepted in accordance with prevailing accounting and auditing rules and regulations. The terms of payment are indicated in the **SCC**.

2.3. For a single-year Framework Agreement, prices charged by the Supplier for Goods delivered and/or services performed under a Call-Off shall not vary from the prices quoted by the Supplier in its bid.

2.4. For multi-year Framework Agreement, prices charged by the Supplier for Goods delivered and/or services performed under a Call-Off shall not vary from the prices quoted by the Supplier during conduct of Mini-Competition.

3. Performance Security

Within ten (10) calendar days from receipt of the Notice of Award by the Bidder from the Procuring Entity but in no case later than prior to the signing of the Contract by both parties, the successful Bidder shall furnish the performance security in any of the forms prescribed in Section 39 of the 2016 revised IRR of RA No. 9184. *In the case of* Framework Agreement, the Bidder may opt to furnish the performance security or a Performance Securing Declaration as defined under the Guidelines on the Use of Framework Agreement.*}*

4. Inspection and Tests

The Procuring Entity or its representative shall have the right to inspect and/or to test the Goods to confirm their conformity to the Project or Framework Agreement*}* specifications at no extra cost to the Procuring Entity in accordance with the Generic Procurement Manual. In addition to tests in the **SCC**, **Section IV (Technical Specifications)** shall specify what inspections and/or tests the Procuring Entity requires, and where they are to be conducted. The Procuring Entity shall notify the Supplier in writing, in a timely manner, of the identity of any representatives retained for these purposes.

All reasonable facilities and assistance for the inspection and testing of Goods, including access to drawings and production data, shall be provided by the Supplier to the authorized inspectors at no charge to the Procuring Entity.

5. Warranty

5.1 In order to assure that manufacturing defects shall be corrected by the Supplier, a warranty shall be required from the Supplier as provided under Section 62.1 of the 2016 revised IRR of RA No. 9184.

5.2 The Procuring Entity shall promptly notify the Supplier in writing of any claims arising under this warranty. Upon receipt of such notice, the Supplier shall, repair or replace the defective Goods or parts thereof without cost to the Procuring Entity, pursuant to the Generic Procurement Manual.

6. Liability of the Supplier

The Supplier's liability under this Contract shall be as provided by the laws of the Republic of the Philippines.

If the Supplier is a joint venture, all partners to the joint venture shall be jointly and severally liable to the Procuring Entity.

Section V
Special Conditions of Contract

Special Conditions of Contract

GCC Clause	
1	**Delivery and Documents –** For purposes of the Contract, "EXW," "FOB," "FCA," "CIF," "CIP," "DDP" and other trade terms used to describe the obligations of the parties shall have the meanings assigned to them by the current edition of INCOTERMS published by the International Chamber of Commerce, Paris. The Delivery terms of this Contract shall be as follows: *For Goods supplied from abroad:* "The delivery terms applicable to the Contract are DDP delivered Light Rail Transit Authority (LRTA), Line 2 Depot, Marcos Highway, Santolan, Pasig City. In accordance with INCOTERMS." *For Goods supplied from abroad:* Upon shipment, the Supplier shall notify the Procuring Entity and the insurance company by cable the full details of the shipment, including Contract Number, description of the Goods, quantity, vessel, bill of lading number and date, port of loading, date of shipment, port of discharge etc. Upon delivery to the Project Site, the Supplier shall notify the Procuring Entity and present the following documents as applicable with the documentary requirements of any letter of credit issued taking precedence: a) Original and four copies of the Supplier's invoice showing Good's description, quantity, unit price, and total amount; b) Original and four copies of the negotiable, clean shipped on board bill lading marked "freight pre-paid" and five copies of the non – negotiable bill of lading; c) Original Supplier's factory inspection report; d) Original and four copies of the Manufacturer's and/or Supplier's warranty certificate; e) Original and four copies of the certificate of origin (for imported Goods); f) Delivery receipt detailing number and description of items received signed by the Procuring Entity's representative at the Project Site; g) Certificate of Acceptance/Inspection Report signed by the Procuring Entity's representative at the Project Site; and h) Four copies of the Invoice Receipt for Property signed by the Procuring Entity's representative at the Project Site; *For Goods supplied from within the Philippines:* "The delivery terms applicable to this Contract are delivered Light Rail Transit Authority (LRTA), Line 2 Depot, Marcos Highway, Santolan, Pasig City. Risk and title will pass from the Supplier to the Procuring Entity upon receipt and final acceptance of the Goods at their final destination." *For Goods supplied from within the Philippines:*

Upon delivery of the Goods to the Project Site, the Supplier shall notify the Procuring Entity and present the following documents to the Procuring Entity:

a) Original and four copies of the Supplier's invoice showing Good's description, quantity, unit price, and total amount;
b) Original and four copies delivery receipt/note, railway receipt, or truck receipt;
c) Original Supplier's factory inspection report;
d) Original and four copies of the Manufacturer's and/or Supplier's warranty certificate;
e) Original and four copies of the certificate of origin (for imported Goods);
f) Delivery receipt detailing number and description of items received signed by the authorized receiving personnel;
g) Certificate of Acceptance/Inspection Report signed by the Procuring Entity's representative at the Project Site; and
h) Four copies of the Invoice Receipt for Property signed by the Procuring Entity's representative at the Project Site.

Delivery of the Goods shall be made by the Supplier in accordance with the terms specified in Section VI (Schedule of Requirements).

For purposes of this Clause the Procuring Entity's Representative at the Project Site is *Light Rail Transit Authority (LRTA), Line 2 Depot, Marcos Highway, Santolan, Pasig City.*

Incidental Services –

The Supplier is required to provide all of the following services, including additional services, if applicable as required in Section VII Technical Specifications and/or as pertinent and due to and based on the nature and character of the goods subject of the procurement:

~~*a.* performance or supervision of on-site assembly and/or start-up of the supplied Goods;~~
~~*b.* furnishing of tools required for assembly and/or maintenance of the supplied Goods;~~
~~*c.* furnishing of a detailed operations and maintenance manual for each appropriate unit of the supplied Goods;~~
~~*d.* performance or supervision or maintenance and/or repair of the supplied Goods, for a period of time agreed by the parties, provided that this service shall not relieve the Supplier of any warranty obligations under this Contract;~~
~~*e.* training of the Procuring Entity's personnel, at the Supplier's plant and/or on-site, in assembly, start-up, operation, maintenance, and/or repair of the supplied Goods.~~
f. Cost of photocopying of Contract and Implementation Documents in such number of sets required by LRTA; and,
g. Cost of notarization of contract and implementation documents.

The Contract price for the Goods shall include the prices charged by the Supplier for incidental services and shall not exceed the prevailing rates charged to other parties by the Supplier for similar services.

Packaging –

The Supplier shall provide such packaging of the Goods as is required to prevent their damage or deterioration during transit to their final destination, as indicated in this Contract. The packaging shall be sufficient to withstand, without limitation, rough handling during transit and exposure to extreme temperatures, salt and precipitation during transit, and open storage. Packaging case size and weights shall take into consideration, where appropriate, the remoteness of the Goods' final destination and the absence of heavy handling facilities at all points in transit.

The packaging, marking, and documentation within and outside the packages shall comply strictly with such special requirements as shall be expressly provided for in the Contract, including additional requirements, if any, specified below, and in any subsequent instructions ordered by the Procuring Entity.

The outer packaging must be clearly marked on at least four (4) sides as follows:
Name of the Procuring Entity
Name of the Supplier
Contract Description
Final Destination
Gross weight
Any special lifting instructions
Any special handling instructions
Any relevant HAZCHEM classifications

A packaging list identifying the contents and quantities of the package is to be placed on an accessible point of the outer packaging if practical. If not practical the packaging list is to be placed inside the outer packaging but outside the secondary packaging.

Transportation –

Where the Supplier is required under Contract to deliver the Goods CIF, CIP, or DDP, transport of the Goods to the port of destination or such other named place of destination in the Philippines, as shall be specified in this Contract, shall be arranged and paid for by the Supplier, and the cost thereof shall be included in the Contract Price.

Where the Supplier is required under this Contract to transport the Goods to a specified place of destination within the Philippines, defined as the Project Site, transport to such place of destination in the Philippines, including insurance and storage, as shall be specified in this Contract, shall be arranged by the Supplier, and related costs shall be included in the contract price.

	Where the Supplier is required under Contract to deliver the Goods CIF, CIP or DDP, Goods are to be transported on carriers of Philippine registry. In the event that no carrier of Philippine registry is available, Goods may be shipped by a carrier which is not of Philippine registry provided that the Supplier obtains and presents to the Procuring Entity certification to this effect from the nearest Philippine consulate to the port of dispatch. In the event that carriers of Philippine registry are available but their schedule delays the Supplier in its performance of this Contract the period from when the Goods were first ready for shipment and the actual date of shipment the period of delay will be considered force majeure. The Procuring Entity accepts no liability for the damage of Goods during transit other than those prescribed by INCOTERMS for DDP deliveries. In the case of Goods supplied from within the Philippines or supplied by domestic Suppliers risk and title will not be deemed to have passed to the Procuring Entity until their receipt and final acceptance at the final destination.
	Intellectual Property Rights – The Supplier shall indemnify the Procuring Entity against all third-party claims of infringement of patent, trademark, or industrial design rights arising from use of the Goods or any part thereof.
2.2	***Full payment or partial payment corresponding to the value of the goods delivered and accepted may be made within Thirty (30) calendar days upon final acceptance of goods and submission of complete documents required by existing accounting and auditing rules of the government specifically, among others, COA CIRCULAR No. 2012-001.***
4	The inspections and tests that will be conducted are: ***Refer to Annex "A" (Test Parameters) of Section VII - Technical Specifications (if applicable)***

Section VI
Schedule of Requirements

The delivery schedule expressed as weeks/months stipulates hereafter a delivery date which is the date of delivery to the project site.

Item Number	Description	Quantity	Total	Delivered, Weeks/Months
	Contract for the Supply of Eight (8) pcs. Pantograph Assembly or its equivalent	**8 pcs.**	**8 pcs.**	**Within Eleven (11) Months from receipt of Purchase Order (PO)**

Section VII
Technical Specifications

Technical Specifications

[Bidders must state here either "Comply" or "Not Comply" against each of the individual parameters of each Specification stating the corresponding performance parameter of the equipment offered. Statements of "Comply" or "Not Comply" must be supported by evidence in a Bidders Bid and cross-referenced to that evidence. Evidence shall be in the form of manufacturer's un-amended sales literature, unconditional statements of specification and compliance issued by the manufacturer, samples, independent test data etc., as appropriate. A statement that is not supported by evidence or is subsequently found to be contradicted by the evidence presented will render the Bid under evaluation liable for rejection. A statement either in the Bidder's statement of compliance or the supporting evidence that is found to be false either during Bid evaluation, post-qualification or the execution of the Contract may be regarded as fraudulent and render the Bidder or supplier liable for prosecution.]

Item No.	Description	Statement of Compliance (State whether "**Comply**" or "**Not Comply**") must be supported by evidence in a Bidders Bid and cross-referenced to that evidence
1	**PANTOGRAPH ASSEMBLY or its Equivalent** **Technical Specification:** Minimum height with insulators: 400±10mm Minimum wire height above lowered: 200mm Maximum working height above lowered position: 2410±50mm Width of pan head: 1700±10mm Total length in resting position: 2238±10mm Total weight excluding insulators: approx. 145kg Collector strip length: 1200±1mm Collector strip spacing: 345±5mm Collector strip material: 2 pcs copper impregnated carbon strips, 60 x 22mm Collector strip drawing: 160 865 010 016 (Bolted Type) **Frame stabilization through a hydraulic oscillation damper** Frame insulators: 4 pcs, 3KV Height: 90mm Weight: 0, 65 kg Voltage: 1500 V Rated Current: 1500 A Maximum current @ 1 min: 2000 A Maximum current @ 10 sec: 2200 A Maximum current @ 1 sec: 2500 A Lateral deflection at maximum working height and a Lateral Force of 300N, according to DIN EN 50206 -2: max. 30mm Static upward force of pantograph: 70±10 N (adjustable from 50 to 100 N) Pan head: Independent suspension of each collector strip, parallel guided Spring rate: 40,000 N/m (±10%) Maximum speed under good catenary condition: 100 km/h **Electrical lowering drive** Working range: 150 mm	

	DC (direct current) permanent magnet motor: 110 V (max. 137 V, min. 77V), Type IP 65 Current: 5 A Raising time: 6 – 10 sec (Dependent on load) Lowering time: 8 – 12 sec (Dependent on load) Temperature: -25° C to 65° C Duty cycle: 25 % at 25° C Safety switch: via magnet switch Standards: IEC 494, IEC 165 Manufactured in accordance to Railway Rolling Stock application. Should fit and compatible with the existing Rotem/Toshiba Megatren Model 2003.	
	Aside from the conformity with the **Schedule of Requirements** and **Technical Specifications**, enumerated and specified in **Sections VI** and **VII**, respectively, of the Bidding Documents, bidders must also submit the following additional duly signed Technical Documents that must be included in the first envelope, to wit: 1. Warranty Package : Minimum of One (1) year upon acceptance; 2. Any of the following: Manufacturer's un-amended sales literature, unconditional statements of specification and compliance issued by the manufacturer, samples, independent test data etc., as appropriate; 3. Certificate of Dealership or Authority to Sell Directly or indirectly issued by the Manufacturer. For indirect issuance, Bidders shall provide documents linking the authorization from the manufacturer down to the bidder. 4. Any International Standard Certificate on testing for Railway Rolling Stock Application but not limited to IEC494, IEC16 or equivalent.	

Note: The bidder's proposal must specifically indicate the brand, make and/or model of the offered product/item in the Bidders proposal column together with the "Comply" or "Not Comply" remark or indicated in the cross-referenced documents. Failure to comply with this requirement will be considered as an incomplete submission, hence, the bid will be disqualified.

ANNEX "A"

TEST PARAMETERS

1.0 ITEM

Item No.	Description
1	PANTOGRAPH ASSEMBLY

2.0 SYSTEM APPLICATION

Rolling Stock: Power Sub-System

3.0 ITEM APPLICATION

Pantograph assembly are essential for SIV and VVVF equipment auxillary power and propulsion of rolling stock.

4.0 PURPOSE

To determine if the sample:

4.1 Conforms with the dimensional measurements.
4.2 Conforms with the technical specifications requirements.
4.3 Passes the continuity and insulation resistance test. *(For Electrical & electronic parts only)*
4.4 Passes the fitting and functionality test.

5.0 TECHNICAL INFORMATION:

Refer to attached template/drawing on Purchase Request (PR)

6.0 TEST DURATION PER ITEM

6.1 Dimensional/Technical Evaluation	1 hr
6.2 Fitting	1 hr
6.3 Functionality Test.	8 hrs

7.0 TEST PROCEDURES

7.1 **Dimensional Measurement**
Measure the dimensions delivered items and compare with the required measurement as specified above.

7.2 **Technical Specification Evaluation**
Compare the delivered item technical specification to the existing .
Perform continuity test and insulation resistance test.

7.3 **Fitting and Functionality Test at Operational Trainset**
7.3.1 Perform fitting and functionality test at depot area (low speed).
7.3.2 Perform functionality test at the revenue line for 8 hours (high speed).

ANNEX B

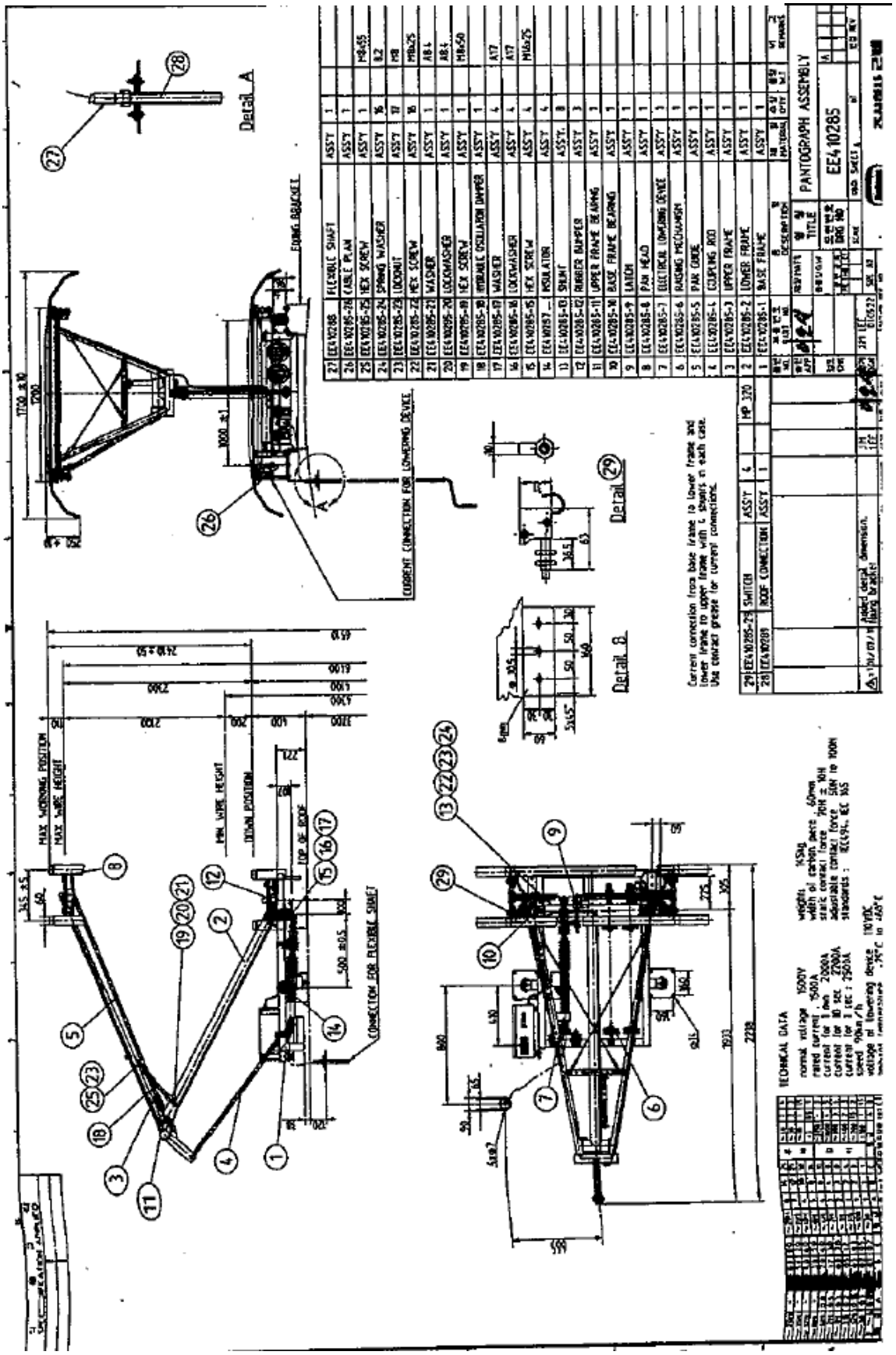
PANTOGRAPH ASSEMBLY
EE410285
Detail A
Detail B
Detail 29
CURRENT CONNECTION FOR LOWERING DEVICE
CONNECTION FOR FLEXIBLE SHAFT
MAX WORKING POSITION
MAX WIRE HEIGHT
MIN WIRE HEIGHT
DOWN POSITION
TOP OF ROOF
TECHNICAL DATA

CARBON STRIP (END PART)

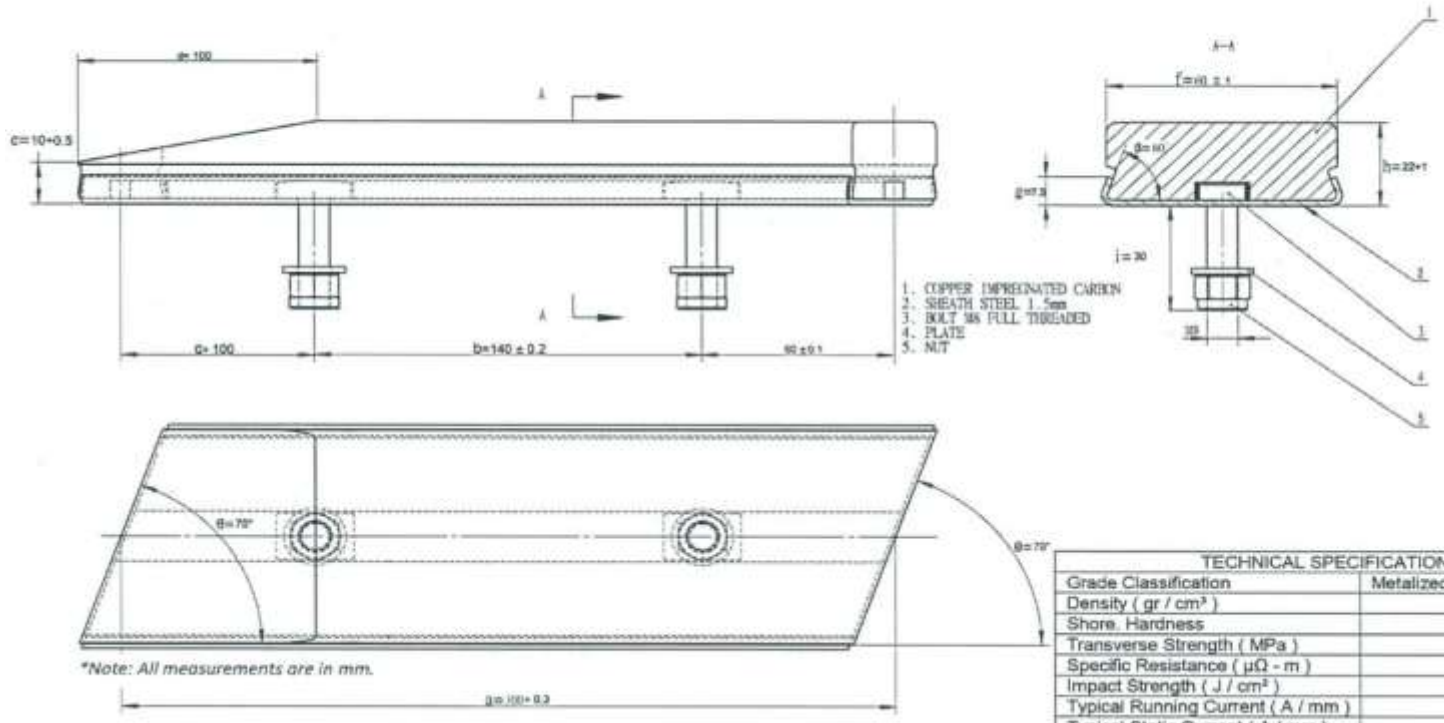

TECHNICAL SPECIFICATION	
Grade Classification	Metalized Carbon Material
Density (gr / cm³)	2.4
Shore. Hardness	90
Transverse Strength (MPa)	65
Specific Resistance (μΩ - m)	3
Impact Strength (J / cm²)	0.3
Typical Running Current (A / mm)	16
Typical Static Current (A / mm)	2.5
% Metal	27%

CARBON STRIP (MIDDLE PART)

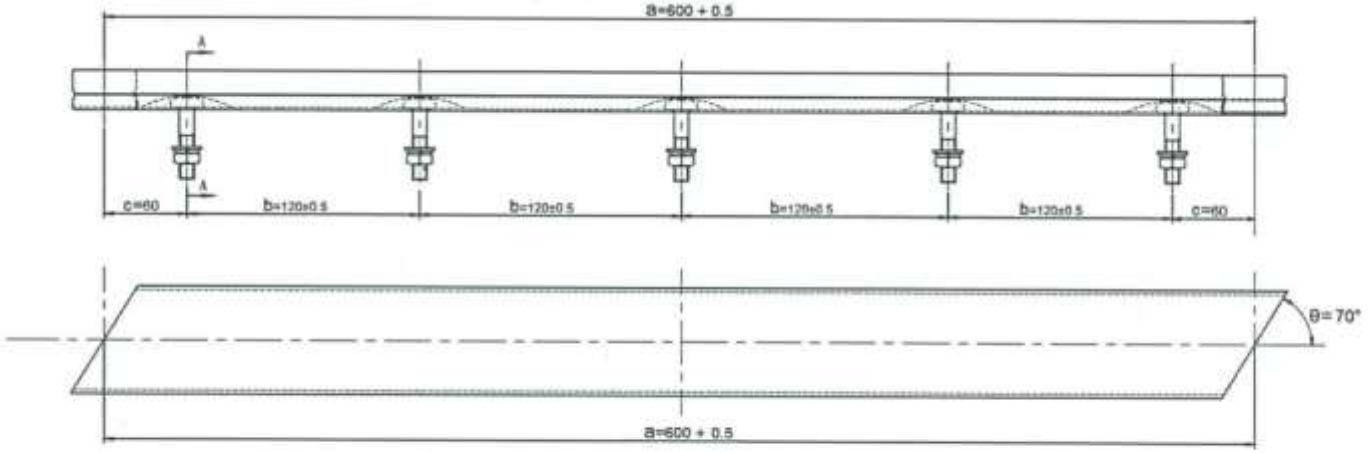

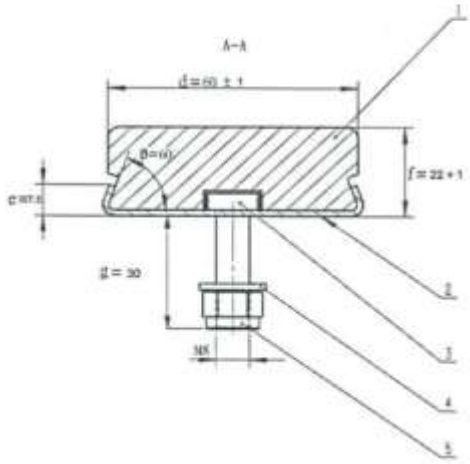

1. COPPER IMPREGNATED CARBON
2. SHEATH STEEL 1.5mm
3. BOLT M8 FULL THREADED
4. PLATE
5. NUT

TECHNICAL SPECIFICATION	
Grade Classification	Metalized Carbon Material
Density (gr / cm³)	2.4
Shore. Hardness	90
Transverse Strength (MPa)	65
Specific Resistance (μΩ - m)	3
Impact Strength (J / cm²)	0.3
Typical Running Current (A / mm)	16
Typical Static Current (A / mm)	2.5
% Metal	27%

**Note: All measurements are in millimeters and are drawn to scale.*

Section VIII
Checklist of Technical and Financial Documents

Checklist of Technical and Financial Documents

I. TECHNICAL COMPONENT ENVELOPE

Class "A" Documents

Legal Documents

☐ (a) Valid PhilGEPS Registration Certificate (Platinum Membership) (all pages) in accordance with Section 8.5.2 of the IRR;

Technical Documents

(b) Statement of the prospective bidder of all its ongoing government and private contracts, including contracts awarded but not yet started, if any, whether similar or not similar in nature and complexity to the contract to be bid; **and**

(c) Statement of the bidder's Single Largest Completed Contract (SLCC) similar to the contract to be bid, except under conditions provided for in Sections 23.4.1.3 and 23.4.2.4 of the 2016 revised IRR of RA No. 9184, within the relevant period as provided in the Bidding Documents; **and**

(d) Original copy of Bid Security. If in the form of a Surety Bond, submit also a certification issued by the Insurance Commission;

or

Original copy of Notarized Bid Securing Declaration; **and**

(e) Conformity with the Technical Specifications, which may include manpower requirements, and/or after-sales/parts, if applicable; **and**

(f) Schedule of Requirements/Delivery Period/Delivery Schedule;

(g) Warranty Period;

(h) Certificate of Dealership or Authority to Sell Directly or indirectly issued by the Manufacturer. For indirect issuance, Bidders shall provide documents linking the authorization from the manufacturer down to the bidder;

(i) International Certification Standard or equivalent

(j) Original duly signed Omnibus Sworn Statement (OSS);

and, Original Notarized Board Secretary's Certificate in case of a corporation, partnership, or cooperative; or Original Special Power of Attorney if Single Proprietor Firm.

Financial Documents

(k) The prospective bidder's computation of Net Financial Contracting Capacity (NFCC);

or

(l) A committed Line of Credit from a Universal or Commercial Bank in lieu of its NFCC computation.

Class "B" Documents

(m) If applicable, a duly signed joint venture agreement (JVA) in case the joint venture is already in existence;
or
duly notarized statements from all the potential joint venture partners stating that they will enter into and abide by the provisions of the JVA in the instance that the bid is successful.

Other documentary requirements under RA No. 9184 (as applicable)

(n) *[For foreign bidders claiming by reason of their country's extension of reciprocal rights to Filipinos]* Certification from the relevant government office of their country stating that Filipinos are allowed to participate in government procurement activities for the same item or product.

(o) Certification from the DTI if the Bidder claims preference as a Domestic Bidder or Domestic Entity.

25 FINANCIAL COMPONENT ENVELOPE

(a) Original of duly signed and accomplished Financial Bid Form; **(Form -5) and** Notarized Board Secretary's Certificate in case of a corporation, partnership, or cooperative; or Original Special Power of Attorney if Single Proprietor Firm.

(b) Original of duly signed and accomplished Price Schedule(s).**(Foreign – Form – 6) / (Local – Form – 6A);**

SEALING AND MARKING OF BIDS
(Two-Envelope System)

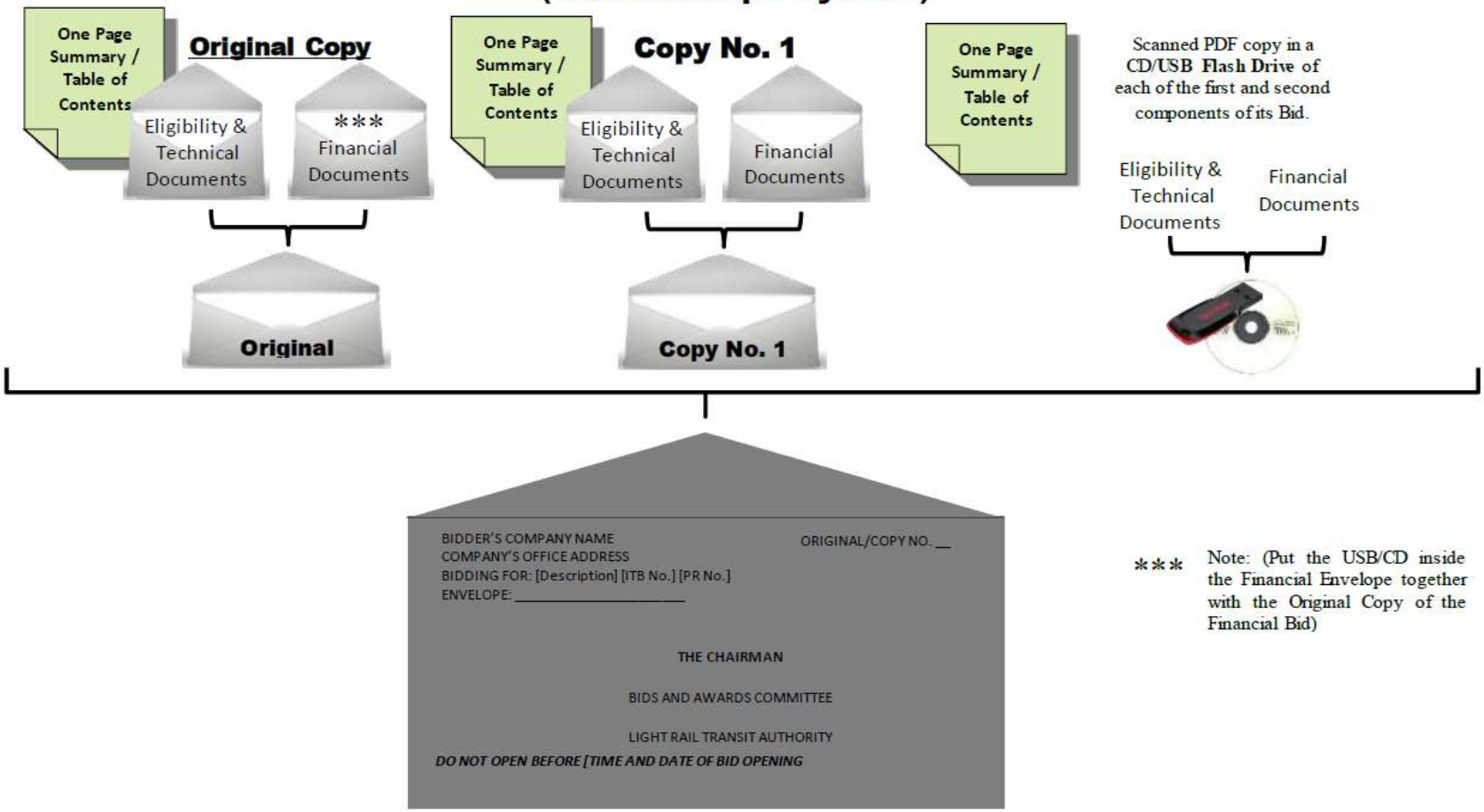

*** Note: (Put the USB/CD inside the Financial Envelope together with the Original Copy of the Financial Bid)

Section IX
Bidding Forms

TABLE OF CONTENTS

FORM NO. 1 – List of All On-going Contracts …… 43

FORM NO. 2 – List of Completed Contracts …… 44

FORM NO. 3 – Bid Securing Declaration……..…… 45

FORM NO. 4 – Omnibus Affidavit, Waiver and Undertaking ……...……..…46

FORM NO. 5 –Bid Form……..…..…...…….……49

FORM NO. 6 – For Goods Offered From Abroad...……...…..…..……51

FORM No. 6 A– For Goods Offered Within the Philippines.....…52

FORM NO. 7 – Contract Agreement Form…….……..…..54

Form No. 1

PR No. : RS2-2504-141 **ITB No. : 2505-098-01**
Project Title : Contract for the Supply of Eight (8) pcs. Pantograph Assembly or its equivalent

Statement of Bidder of All Its On-going Government and Private Contracts, Including Contracts Awarded But Not Yet Started

As of _____

Name of Bidder: _____

Client and Address w/ Contact Person and Contact Details (Tel./Cell No. and/or Email Address	Date of Award	Nature of Contract whether or not supply and delivery	Description of Project/s	Contract Date of Delivery/ Completion	Amount of Contract	Value of Outstanding Contract	Specify whether as Manufacturer, Supplier, Distributor or Sub-Contractor

Bidder is requested to submit copies of Notice of Award and/or Purchase Order/Contract; or equivalent documents for post-qualification evaluation purposes.

Submitted by (Print Name and Sign) Designation

Form No. 2

PR No. : RS2-2504-141 **ITB No. : 2505-098-01**
Project Title : Contract for the Supply of Eight (8) pcs. Pantograph Assembly or its equivalent

Statement of Bidder of at Least One (1) Completed Contract Compliant With the Track Record Requirement Specified in BDS Clause 5.3 In Relation to ITB Clause 5.3

As of _____

Name of Bidder: _____

Client and Address w/ Contact Person and Contact Details (Tel./Cell No. and/or Email Address	Date of Award	Nature of Contract whether or not supply and delivery	Description of Project/s	Date of Completion	Amount of Contract	Specify whether as Manufacturer, Supplier, Distributor or Sub-Contractor

The statement must be accompanied with copies of Contract, AND Certificate of Completion or Acceptance; or equivalent documents evidencing scope of work and contract completion.

Submitted by (Print Name and Sign) Designation

_____ _____

Form No. 3

Bid Securing Declaration Form

[shall be submitted with the Bid if bidder opts to provide this form of bid security]

REPUBLIC OF THE PHILIPPINES)
CITY OF _____) S.S.

BID SECURING DECLARATION
Project Identification No.: *[Insert number]*

To: *[Insert name and address of the Procuring Entity]*

I/We, the undersigned, declare that:

1. I/We understand that, according to your conditions, bids must be supported by a Bid Security, which may be in the form of a Bid Securing Declaration.

2. I/We accept that: (a) I/we will be automatically disqualified from bidding for any procurement contract with any procuring entity for a period of two (2) years upon receipt of your Blacklisting Order; and, (b) I/we will pay the applicable fine provided under Section 6 of the Guidelines on the Use of Bid Securing Declaration, within fifteen (15) days from receipt of the written demand by the procuring entity for the commission of acts resulting to the enforcement of the bid securing declaration under Sections 23.1(b), 34.2, 40.1 and 69.1, except 69.1(f),of the IRR of RA No. 9184; without prejudice to other legal action the government may undertake.

3. I/We understand that this Bid Securing Declaration shall cease to be valid on the following circumstances:

    a. Upon expiration of the bid validity period, or any extension thereof pursuant to your request;
    b. I am/we are declared ineligible or post-disqualified upon receipt of your notice to such effect, and (i) I/we failed to timely file a request for reconsideration or (ii) I/we filed a waiver to avail of said right; and
    c. I am/we are declared the bidder with the Lowest Calculated Responsive Bid, and I/we have furnished the performance security and signed the Contract.

IN WITNESS WHEREOF, I/We have hereunto set my/our hand/s this ____ day of *[month] [year]* at *[place of execution]*.

[Insert NAME OF BIDDER OR ITS AUTHORIZED REPRESENTATIVE]
[Insert signatory's legal capacity]
Affiant

[Jurat]
[Format shall be based on the latest Rules on Notarial Practice]

Form No. 4

Omnibus Sworn Statement (Revised)

[shall be submitted with the Bid]

REPUBLIC OF THE PHILIPPINES)
CITY/MUNICIPALITY OF _____) S.S.

AFFIDAVIT

I, [Name of Affiant], of legal age, [Civil Status], [Nationality], and residing at [Address of Affiant], after having been duly sworn in accordance with law, do hereby depose and state that:

1. *[Select one, delete the other:]*

   [If a sole proprietorship:] I am the sole proprietor or authorized representative of [Name of Bidder] with office address at [address of Bidder];

   [If a partnership, corporation, cooperative, or joint venture:] I am the duly authorized and designated representative of [Name of Bidder] with office address at [address of Bidder];

2. *[Select one, delete the other:]*

   [If a sole proprietorship:] As the owner and sole proprietor, or authorized representative of [Name of Bidder], I have full power and authority to do, execute and perform any and all acts necessary to participate, submit the bid, and to sign and execute the ensuing contract for [Name of the Project] of the [Name of the Procuring Entity], as shown in the attached duly notarized Special Power of Attorney;

   [If a partnership, corporation, cooperative, or joint venture:] I am granted full power and authority to do, execute and perform any and all acts necessary to participate, submit the bid, and to sign and execute the ensuing contract for [Name of the Project] of the [Name of the Procuring Entity], as shown in the attached [state title of attached document showing proof of authorization (e.g., duly notarized Secretary's Certificate, Board/Partnership Resolution, or Special Power of Attorney, whichever is applicable;)];

3. [Name of Bidder] is not "blacklisted" or barred from bidding by the Government of the Philippines or any of its agencies, offices, corporations, or Local Government Units, foreign government/foreign or international financing institution whose blacklisting rules have been recognized by the Government Procurement Policy Board, **by itself or by relation, membership, association, affiliation, or controlling interest with another blacklisted person or entity as defined and provided for in the Uniform Guidelines on Blacklisting;**

4. Each of the documents submitted in satisfaction of the bidding requirements is an authentic copy of the original, complete, and all statements and information provided therein are true and correct;

5. [Name of Bidder] is authorizing the Head of the Procuring Entity or its duly authorized representative(s) to verify all the documents submitted;

6. *[Select one, delete the rest:]*

   [If a sole proprietorship:] The owner or sole proprietor is not related to the Head of the Procuring Entity, members of the Bids and Awards Committee (BAC), the Technical Working Group, and the BAC Secretariat, the head of the Project Management Office or the end-user unit, and the project consultants by consanguinity or affinity up to the third civil degree;

   [If a partnership or cooperative:] None of the officers and members of *[Name of Bidder]* is related to the Head of the Procuring Entity, members of the Bids and Awards Committee (BAC), the Technical Working Group, and the BAC Secretariat, the head of the Project Management Office or the end-user unit, and the project consultants by consanguinity or affinity up to the third civil degree;

   [If a corporation or joint venture:] None of the officers, directors, and controlling stockholders of *[Name of Bidder]* is related to the Head of the Procuring Entity, members of the Bids and Awards Committee (BAC), the Technical Working Group, and the BAC Secretariat, the head of the Project Management Office or the end-user unit, and the project consultants by consanguinity or affinity up to the third civil degree;

7. *[Name of Bidder]* complies with existing labor laws and standards; and

8. *[Name of Bidder]* is aware of and has undertaken the responsibilities as a Bidder in compliance with the Philippine Bidding Documents, which includes:

   a. Carefully examining all of the Bidding Documents;
   b. Acknowledging all conditions, local or otherwise, affecting the implementation of the Contract;
   c. Making an estimate of the facilities available and needed for the contract to be bid, if any; and
   d. Inquiring or securing Supplemental/Bid Bulletin(s) issued for the *[Name of the Project]*.

9. *[Name of Bidder]* did not give or pay directly or indirectly, any commission, amount, fee, or any form of consideration, pecuniary or otherwise, to any person or official, personnel or representative of the government in relation to any procurement project or activity.

10. **In case advance payment was made or given, failure to perform or deliver any of the obligations and undertakings in the contract shall be sufficient grounds to constitute criminal liability for Swindling (Estafa) or the commission of fraud with unfaithfulness or abuse of confidence through misappropriating or converting any payment received by a person or entity under an obligation involving the duty to deliver certain goods or services, to the prejudice of the public and the government of the Philippines pursuant to Article 315 of Act No. 3815 s. 1930, as amended, or the Revised Penal Code.**

IN WITNESS WHEREOF, I have hereunto set my hand this __ day of ___, 20__ at _____, Philippines.

[Insert NAME OF BIDDER OR ITS AUTHORIZED REPRESENTATIVE]
[Insert signatory's legal capacity]
Affiant

[Jurat]
[Format shall be based on the latest Rules on Notarial Practice]

Form No. 5

Bid Form for the Procurement of Goods

[shall be submitted with the Bid]

BID FORM

Date : _____

Project Identification No. : _____

To: [name and address of Procuring Entity]

Having examined the Philippine Bidding Documents (PBDs) including the Supplemental or Bid Bulletin Numbers *[insert numbers]*, the receipt of which is hereby duly acknowledged, we, the undersigned, offer to *[supply/deliver/perform] [description of the Goods]* in conformity with the said PBDs for the sum of *[total Bid amount in words and figures]* or the total calculated bid price, as evaluated and corrected for computational errors, and other bid modifications in accordance with the Price Schedules attached herewith and made part of this Bid. The total bid price includes the cost of all taxes, such as, but not limited to: *[specify the applicable taxes, e.g. (i) value added tax (VAT), (ii) income tax, (iii) local taxes, and (iv) other fiscal levies and duties]*, which are itemized herein or in the Price Schedules,

If our Bid is accepted, we undertake:

a. to deliver the goods in accordance with the delivery schedule specified in the Schedule of Requirements of the Philippine Bidding Documents (PBDs);

b. to provide a performance security in the form, amounts, and within the times prescribed in the PBDs;

c. to abide by the Bid Validity Period specified in the PBDs and it shall remain binding upon us at any time before the expiration of that period.

[Insert this paragraph if Foreign-Assisted Project with the Development Partner:
Commissions or gratuities, if any, paid or to be paid by us to agents relating to this Bid, and to contract execution if we are awarded the contract, are listed below:

Name and address Amount and Purpose of
ofagentCurrencyCommission or gratuity

_____
_____
_____
(if none, state "None")]

Until a formal Contract is prepared and executed, this Bid, together with your written acceptance thereof and your Notice of Award, shall be binding upon us.

We understand that you are not bound to accept the Lowest Calculated Bid or any Bid you may receive.

We certify/confirm that we comply with the eligibility requirements pursuant to the PBDs.

The undersigned is authorized to submit the bid on behalf of *[name of the bidder]* as evidenced by the attached *[state the written authority]*.

We acknowledge that failure to sign each and every page of this Bid Form, including the attached Schedule of Prices, shall be a ground for the rejection of our bid.

Name: _____

Legal capacity: _____

Signature: _____

Duly authorized to sign the Bid for and behalf of: _____

Date: _____

Form No. 6

Price Schedule for Goods Offered from Abroad

[shall be submitted with the Bid if bidder is offering goods from Abroad]

For Goods Offered from Abroad

Name of Bidder _____ Project ID No._____ Page ___ of ___

1	2	3	4	5	6	7	8	9
Item	Description	Country of origin	Quantity	Unit price CIF port of entry (specify port) or CIPnamed place (specify border point or place of destination)	Total CIForCIP price per item (col. 4 x 5)	Unit Price Delivered Duty Unpaid (DDU)	Unit priceDelivered Duty Paid (DDP)	Total Price delivered DDP (col 4 x 8)
1	Contract for the Supply of Eight (8) pcs. Pantograph Assembly or its equivalent							
Grand Total								

Name: _____

Legal Capacity: _____

Signature: _____

Duly authorized to sign the Bid for and behalf of: _____

Form No. 6A

Price Schedule for Goods Offered from Within the Philippines

[shall be submitted with the Bid if bidder is offering goods from within the Philippines]

For Goods Offered from Within the Philippines

Name of Bidder _____ Project ID No._____ Page ___of___

1	2	3	4	5	6	7	8	9	10
Item	Description	Country of origin	Quantity	Unit price EXWp er item	Transportation and all other costs incidental to delivery, per item	Sales and other taxes payable if Contract is awarded, per item	Cost of Incidental Services, if applicable, per item	Total Price, per unit (col 5+6+7+8)	Total Price delivered Final Destination (col 9) x (col 4)
1	Contract for the Supply of Eight (8) pcs. Pantograph Assembly or its equivalent								
Grand Total									

Name: _____

Legal Capacity: _____

Signature: _____

Duly authorized to sign the Bid for and behalf of: _____

Form No. 7

Contract Agreement Form for the Procurement of Goods (Revised)

[Not required to be submitted with the Bid, but it shall be submitted within ten (10) days after receiving the Notice of Award]

CONTRACT AGREEMENT

THIS AGREEMENT made the _____ day of _____ 20_____ between [name of PROCURING ENTITY] of the Philippines (hereinafter called "the Entity") of the one part and [name of Supplier] of [city and country of Supplier] (hereinafter called "the Supplier") of the other part;

WHEREAS, the Entity invited Bids for certain goods and ancillary services, particularly [brief description of goods and services] and has accepted a Bid by the Supplier for the supply of those goods and services in the sum of *[contract price in words and figures in specified currency]* (hereinafter called "the Contract Price").

NOW THIS AGREEMENT WITNESSETH AS FOLLOWS:

1. In this Agreement words and expressions shall have the same meanings as are respectively assigned to them in the Conditions of Contract referred to.

2. The following documents as required by the 2016 revised Implementing Rules and Regulations of Republic Act No. 9184 shall be deemed to form and be read and construed as integral part of this Agreement, *viz.*:

   i. Philippine Bidding Documents (PBDs);
      i. Schedule of Requirements;
      ii. Technical Specifications;
      iii. General and Special Conditions of Contract; and
      iv. Supplemental or Bid Bulletins, if any

   ii. Winning bidder's bid, including the Eligibility requirements, Technical and Financial Proposals, and all other documents or statements submitted;

      Bid form, including all the documents/statements contained in the Bidder's bidding envelopes, as annexes, and all other documents submitted (*e.g.*, Bidder's response to request for clarifications on the bid), including corrections to the bid, if any, resulting from the Procuring Entity's bid evaluation;

   iii. Performance Security;

   iv. Notice of Award of Contract; and the Bidder's conforme thereto; and

   v. Other contract documents that may be required by existing laws and/or the Procuring Entity concerned in the PBDs. **Winning bidder agrees that additional contract documents or information prescribed by the GPPB**

that are subsequently required for submission after the contract execution, such as the Notice to Proceed, Variation Orders, and Warranty Security, shall likewise form part of the Contract.

3. In consideration for the sum of *[totalcontract price in words and figures]* or such other sums as may be ascertained, *[Named of the bidder]* agrees to *[state the object of the contract]* in accordance with his/her/its Bid.

4. The *[Name of the procuring entity]* agrees to pay the above-mentioned sum in accordance with the terms of the Bidding.

IN WITNESS whereof the parties hereto have caused this Agreement to be executed in accordance with the laws of the Republic of the Philippines on the day and year first above written.

[Insert Name and Signature]	*[Insert Name and Signature]*
[Insert Signatory's Legal Capacity]	*[Insert Signatory's Legal Capacity]*
for:	*for:*
[Insert Procuring Entity]	*[Insert Name of Supplier]*

Acknowledgment

[Format shall be based on the latest Rules on Notarial Practice]